Electrolux

Technical Support Europe

SERVICE MANUAL

DISHWASHER

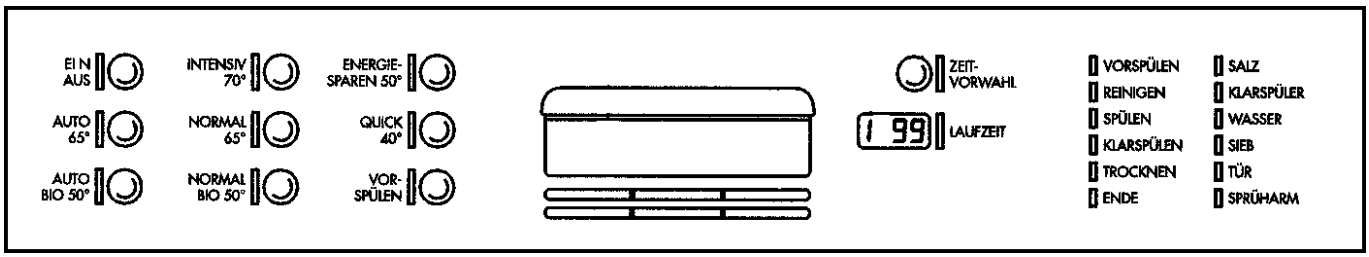

Dishwasher

Easytronic Dishwashers with Flow Heater - Fully Integrated, Integrated, Built Under, Freestanding

Muggenhofer Straße 135
D-90429 Nürnberg
Germany

Fax +49 (0)911 323 1420

Publ.-Nr.:
599 50 69 24
685
EN

TSE - N
Ausgabe: 11.98
Edition: 11.98

Dishwasher 292 1372 01

Easytronic Dishwashers with Flow Heater - Fully Integrated, Integrated, Built Under, Freestanding

Technical Data

Dimensions

Build-in dimensions for Fully Integrated Dishwashers

ÖKO-FAVORIT 6270 / 5270 / 3270 Vi

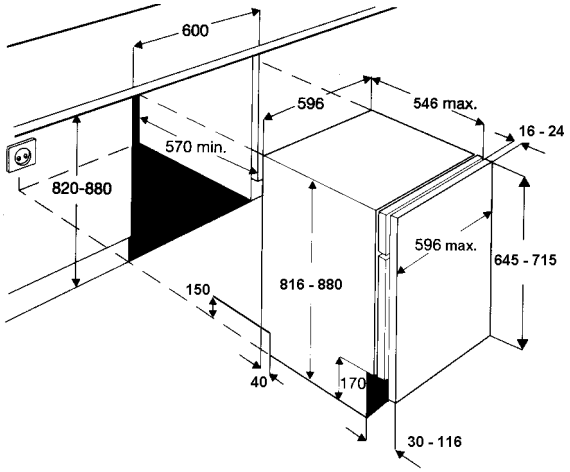

Build-in dimensions for Integrated Dishwashers

ÖKO-FAVORIT 8081 i, 6060 i, 5060 i, 5050 i

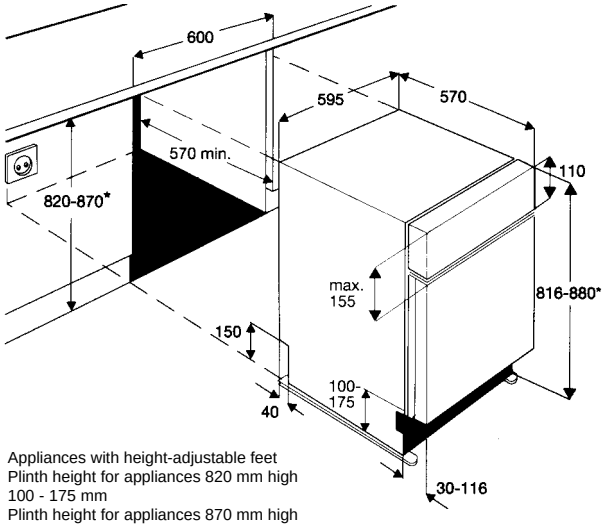

* Appliances with height-adjustable feet
Plinth height for appliances 820 mm high
100 - 175 mm
Plinth height for appliances 870 mm high
150 - 230 mm

Build-in dimensions for Built-Under Dishwashers

ÖKO-FAVORIT 5060 U, 4230 U

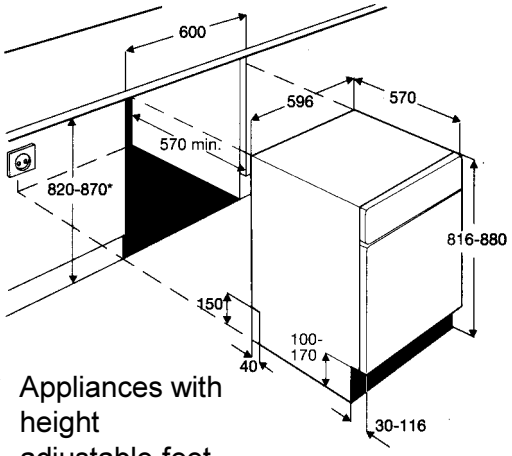

* Appliances with height adjustable feet

Dimensions for Freestanding Dishwasher

Height 85 cm
Width 60 cm
Depth 60 cm

Height with worktop removed 82 cm
Feet adjustment 1 cm

Dishwasher 292 1372 02

Easytronic Dishwashers with Flow Heater - Fully Integrated, Integrated, Built Under, Freestanding

Technical Data

Demand Values

Model	half loading water	half loading energy	full loading water	full loading energy	noise
ÖKO-FAVORIT 6080	13 l	0,95 kWh	15 l	1,15 kWh	45 dB
ÖKO-FAVORIT 5080	13 l	0,95 kWh	15 l	1,15 kWh	47 dB
ÖKO-FAVORIT 5070	14 l	1,05 kWh	16 l	1,25 kWh	47 dB
ÖKO-FAVORIT 4070	14 l	1,05 kWh	16 l	1,25 kWh	49 dB
ÖKO-FAVORIT 6280 U	13 l	0,95 kWh	15 l	1,15 kWh	45 dB
ÖKO-FAVORIT 5270 U	14 l	1,05 kWh	16 l	1,25 kWh	47 dB
ÖKO-FAVORIT 6280 i	13 l	0,95 kWh	15 l	1,15 kWh	43 dB
ÖKO-FAVORIT 5280 i	13 l	0,95 kWh	15 l	1,15 kWh	45 dB
ÖKO-FAVORIT 5270 i	14 l	1,05 kWh	16 l	1,25 kWh	47 dB
ÖKO-FAVORIT 4270 i	14 l	1,05 kWh	16 l	1,25 kWh	47 dB
ÖKO-FAVORIT 6270 vi	13 l	1,05 kWh	15 l	1,25 kWh	43 dB
ÖKO-FAVORIT 5270 vi	14 l	1,05 kWh	16 l	1,25 kWh	47 dB
ÖKO-FAVORIT 3270 vi	15 l	1,10 kWh	17 l	1,30 kWh	49 dB

Programme Table

	intensive 70 ° / 65 °	normal 65 °	normal BIO 50 °	economy BIO 50 °	quick 50 ° / 40 °	pre-rinse
6080 / 6280 u / 6280 i	70 °	X	X	X	40 °	X
5080 / 5280 i	70 °	X	X	-	50 °	X
5070 / 5270 u / 5270 i	70 °	X	X	-	50 °	X
4070 / 4270 i	65 °	-	X	-	50 °	X
6270 vi	70 °	X	X	X	40 °	X
5270 vi	70 °	X	X	-	50 °	X
3270 vi	-	X	X	-	50 °	-

Components

Interference Filter

The interference filter is connected in the terminal board parallel to the mains feed.

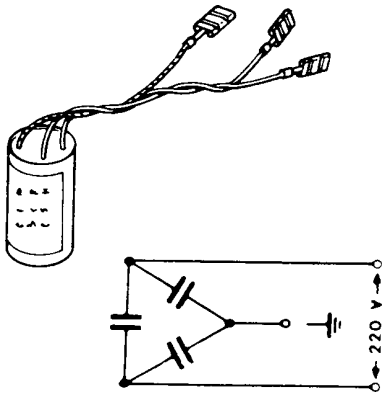

Pressure Switch

The pressure switch controls the water level.
Without water, contact 11 - 12 is closed.

fN	Switch point with level	65 mm Ws
	Reset point with level	45 mm Ws
fS	Switch point with safety level	114 mm Ws
	Reset point	90 mm Ws

The pressure switch is not adjustable.

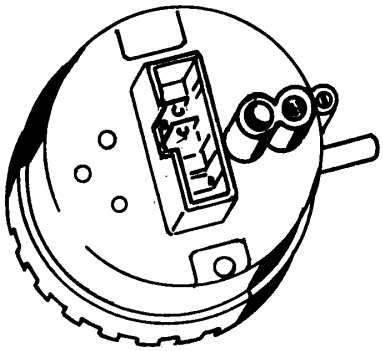

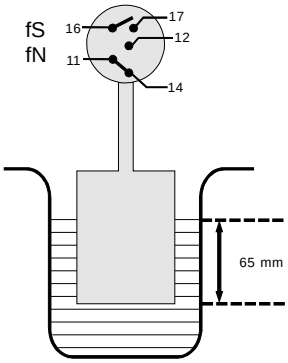

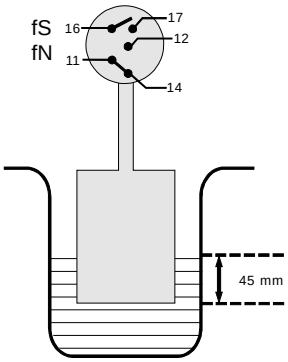

Flow Heater

The flow heater heats the water to the required temperature.
During the wash cycle, water is contantly passing through the flow heater.

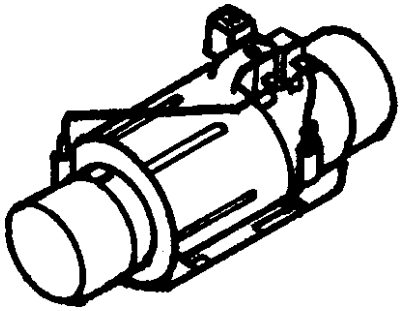

Power output	2100 W
Resistor	25 Ω
Protector	98 °C ± 5 K
Thermal fuse	260 °C

04.99
HV 83-N

Circulation Pump

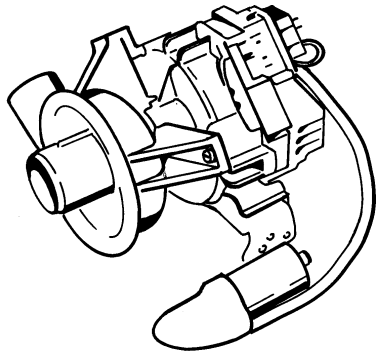

The circulation pump is driven by an asynchronous motor with an auxiliary winding. The auxiliary winding ist in circuit with a 4 mF capacitor. A tacho generator is used for speed control.
There are three speeds for rinsing- 1600 1/min
2000 1/min
2800 1/min

Power output 50 W

Drain Pump

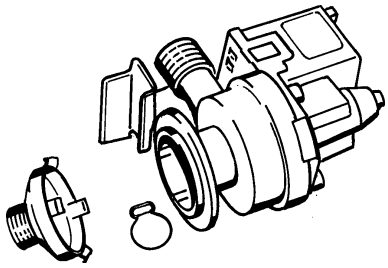

The drain pump is driven by a synchronous motor.
Power output 30 W.
Pump rate 15 l/min.

NTC Temperature Sensor

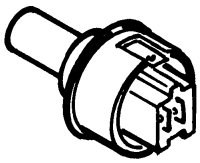

NTC-Temperaturfühler	
Temperature sensor NTC-resistor	
Temperatur/Widerstand	20 °C / 6032 Ω
temperature/resistor	25 °C / 4829 Ω
(nur bei vollelektron.	30 °C / 3891 Ω
Geschirrspüler)	40 °C / 2573 Ω
(only for fully electronic dishwasher)	50 °C / 1741 Ω
	55 °C / 1444 Ω
	60 °C / 1204 Ω
	65 °C / 1009 Ω
	70 °C / 849 Ω

Detergent / Rinse Aid Combination Dispenser Unit

Detergent dosage = 20 ml - 30 ml

Rinse Aid capacity	150 ml
Dosage settings	1 - 6
Quantity	1 cm^3 - 6 cm^3

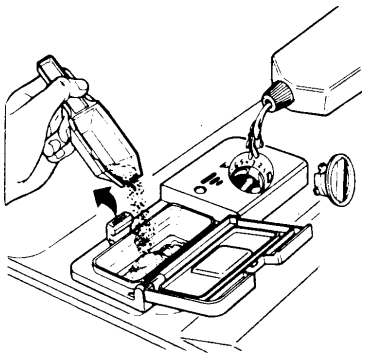

The detergent dispenser is activated by a release coil. The first operation adds the detergent, and the second the rinse aid. If the door is opened, the latching bar is reset to the detergent dosage position.

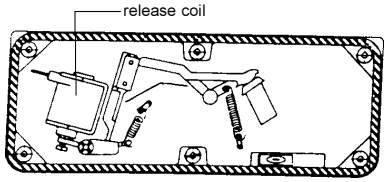

Input Module

The programs are selected via the input module, which is mounted in the door. All components are connected to this module.

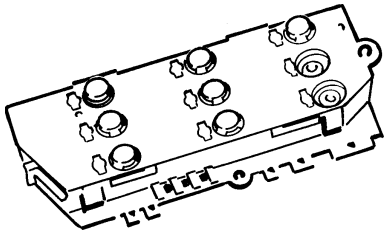

Output Module

Depending on models displays are integrated into the output module.

- o salt
- o rinse aid
- o water
- o filter
- o display
- o residual run time
- o delay start
- o fault display
- o water hardness
- o program cycle display

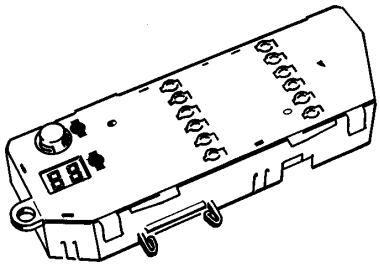

Fully integrated control Panel

1 Input module
2 Output module

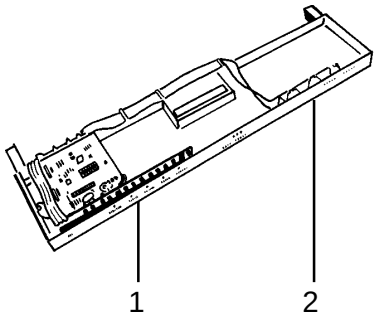

Electronic

On electronic models, a micro processor controls all components, this is done using triacs. The electronic also memorizes all programme data.

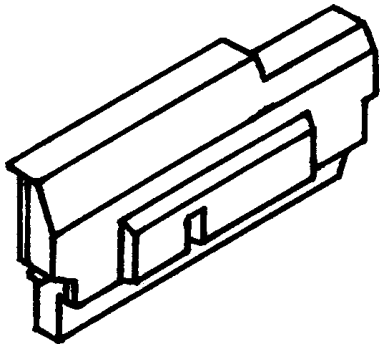

Drying Fan

The drying fan sucks the humid air from the tub, and mixes it with dry air which is drawn up from in between the door panels (1) and blows it out through a vent situated below the door handle (2).

During the wash cycle the fan intake vent on the inside of the door is closed by a thermoelectric valve (3).

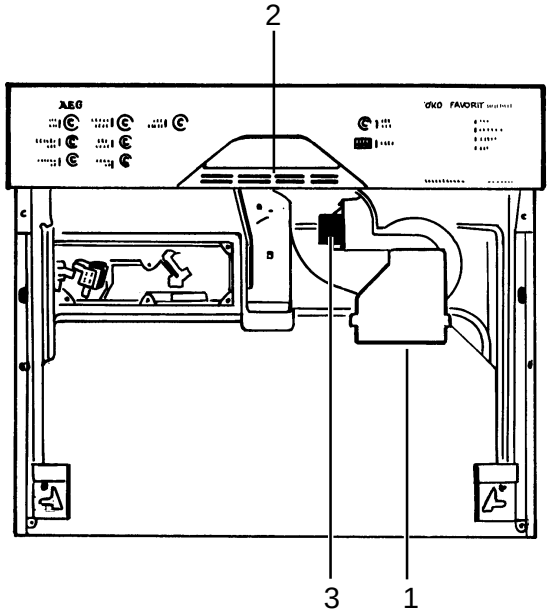

Servo Door Lock

Fully integrated dishwashers have a servo door lock. Once the program has started the door is locked automatically, however the door can be openend by using extra effort.

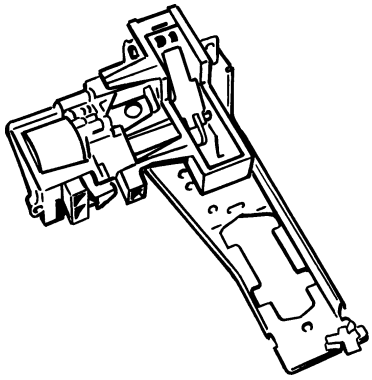

Water Softening

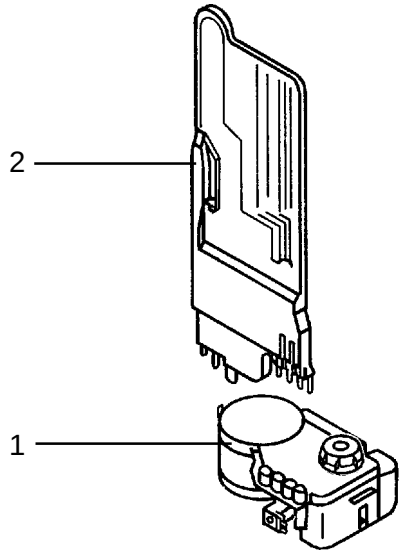

The components required for water softening.
1. softener unit
2. regeneration dosage chamber

The incoming water flows through the softener which works according to the ion exchange principle. The ion exchanger is filled with small epoxy resin balls. The resins exchange the hardness constituents (calcium and magnesium), for sodium ions.

When all the sodium ions are used up, it is necessary to regenerate the softener. This is done by flushing a brine solution through the softener.

Afterwards the softener is washed out with fresh water and is now fully effective.

Depending on the water hardness, regeneration is only necessary after several wash cycles.

The softening system is designed for a water hardness of up to 50 °dH.

Position of Components

Detergent dispenser (1)
Drying fan intake vent (2)
Spray arms (3)

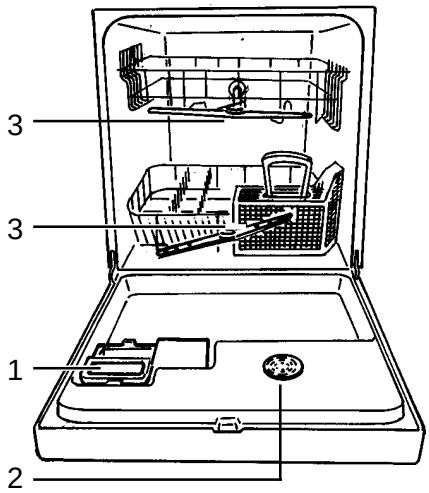

input module (1)
output module (2)

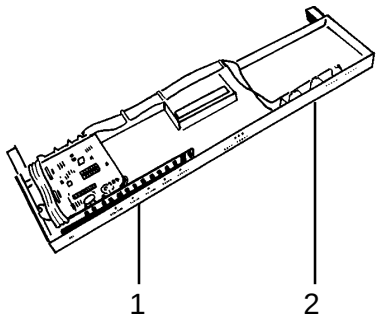

Detergent dispenser (1)
Drying fan (2)

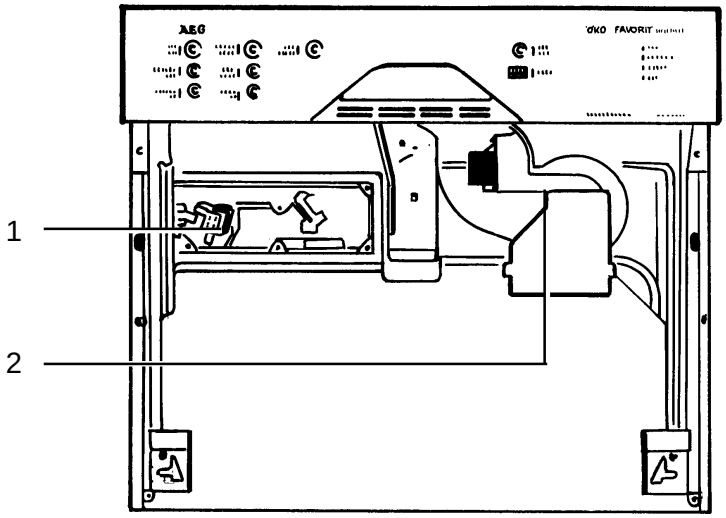

Electronic (1)
Thermal sensor (2)
Drain pump (3)
Pressure switch (4)

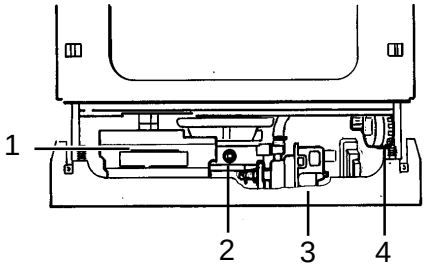

Flow heater (1)
Terminal board (2)
Inlet valve (3)

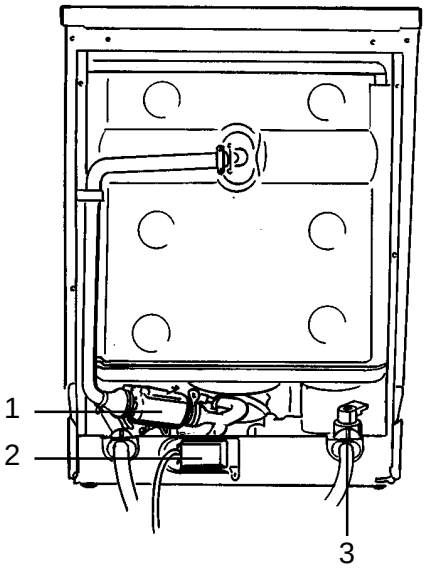

To remove side panel :

1 Remove fixing screws

2 Pull the panel away from the rear, and gently out of the front trim.

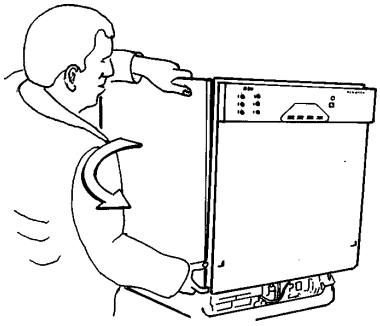

Removing the regeneration dosage chamber :

1 disengage locking tabs (1)
2 disconnect hoses (2)
3 holding the top of the chamber, pull upwards disengaging it from the softener.

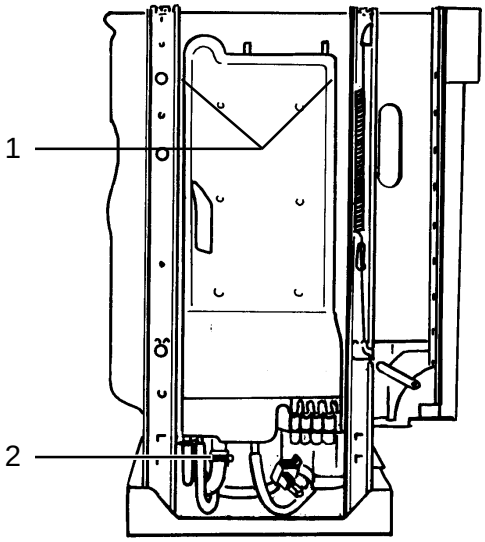

Removing the softener unit :

1 remove the securing nut located under the salt cap.
2 press softener (1) down and remove it through the front from the base area
3 CAUTION if accessible release reed switch.

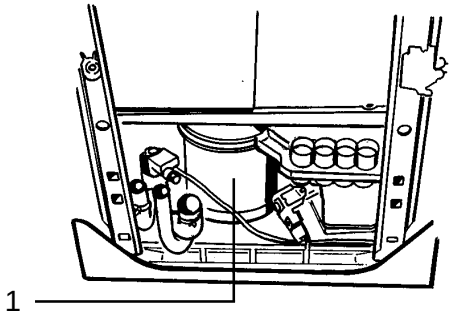

Removing the base :

1 remove side panels, rear panel and plinth panel
2 gently release base fixing clips with a screwdriver (figure)
3 take off base carefully and release circulation pump, electronic and heater relay
4 disconnect the float switch

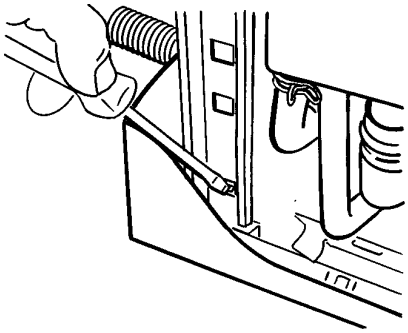

With base removed the circulation pump (1) is accessible.

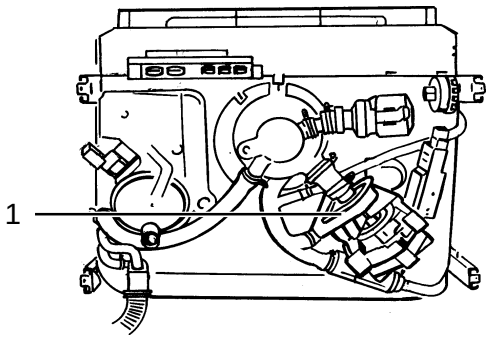

Water Course Scheme

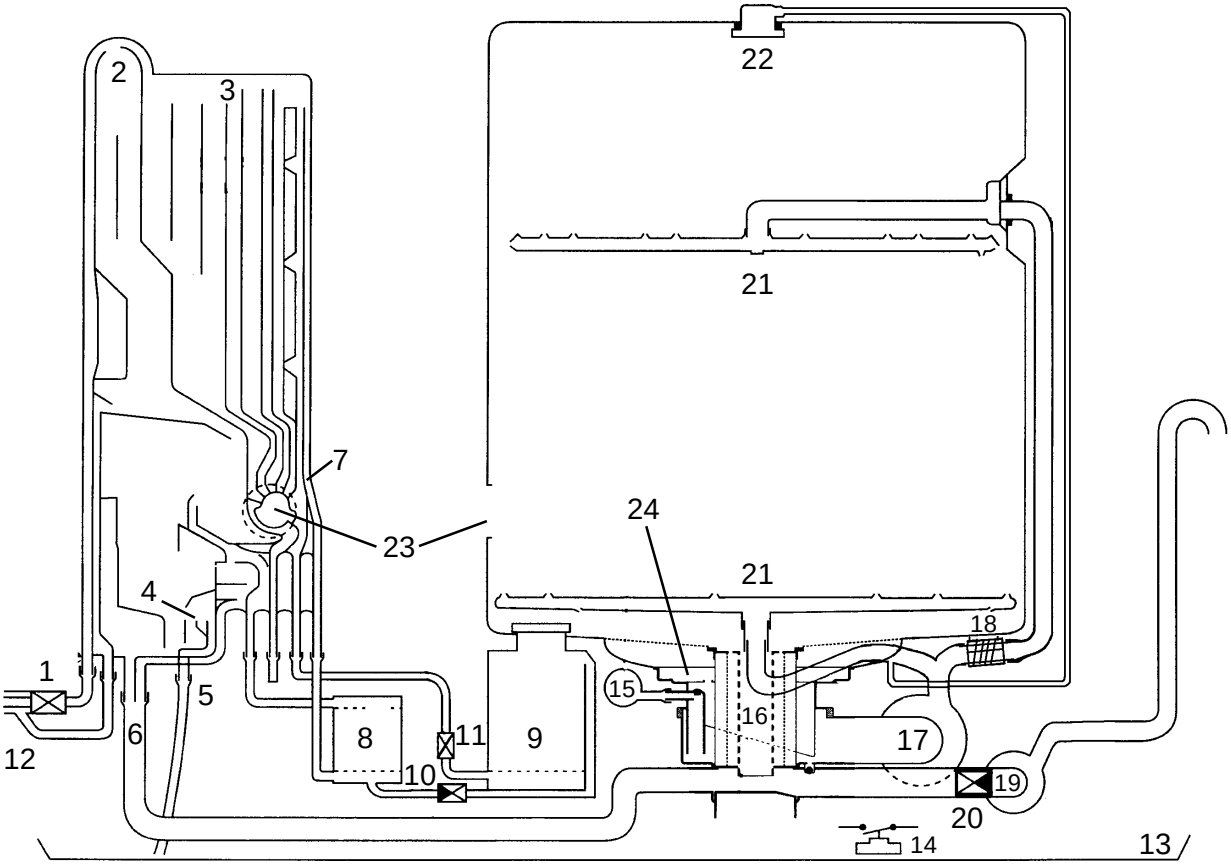

1	Inlet valve	13	Base tray
2	Air break	14	Float switch
3	Regeneration water dosage	15	Pressure switch
4	Overflow safety level	16	Filter
5	Safety overflow	17	Circulation pump
6	Inlet to sump from regeneration dosage chamber	18	Flow heater
7	Regeneration dosage chamber	19	Drain pump
8	Softener	20	Non-return valve
9	Salt container	21	Spray arms
10	Non-return valve salt container	22	Roof-mounted shower
11	Regeneration valve	23	Tub vent
12	Safety inlet hose	24	Sump assembly

All-Around Water Protection

1. Aqua-Control Inlet Hose

   The inlet hose has a double-wall construction. The inner hose is equipped with a flow restrictor built into the tap connection, and has a flow rate of 4 litres per minute. The inlet valve (1) is located in the base of the dishwasher. The safety outer hose (12) is connected to the regeneration chamber. If the inner hose should burst, the water, passes into the regeneration chamber and over the safety overflow (5) and into the base tray activating the float switch which energises the drain pump. This drains the dishwasher preventing water damage.

2. Leakage Protection

   The anti-flood switch in the base tray will activate the drain pump and drain the water from the tub in the event of an internal leakage.
   If the float switch is activated, all electric components are switched off except the electronic and the drain pump.

All-Around Water Protection

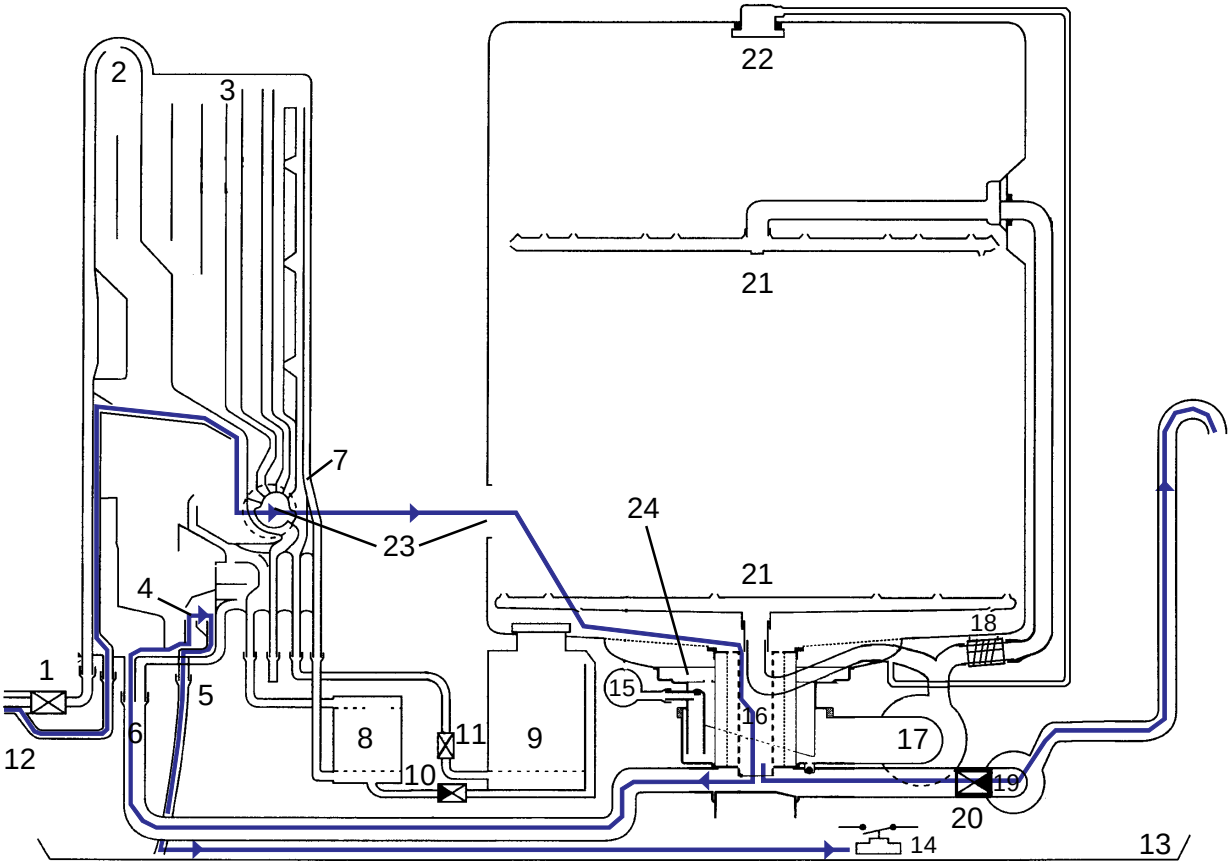

1	Inlet valve	13	Base tray
2	Air break	14	Float switch
3	Regeneration water dosage	15	Pressure switch
4	Overflow safety level	16	Filter
5	Safety overflow	17	Circulation pump
6	Inlet to sump from regeneration dosage chamber	18	Flow heater
		19	Drain pump
7	Regeneration dosage chamber	20	Non-return valve
8	Softener	21	Spray arms
9	Salt container	22	Roof-mounted shower
10	Non-return valve salt container	23	Tub vent
11	Regeneration valve	24	Sump assembly
12	Safety inlet hose		

Water Inlet

The water flows into the regeneration dosage chamber (7) via inlet valve (1), over air break (2), into regeneration dosage chambers (3) into softener (8). At this point the water divides. 1/4 of the water enters the tub through the vent (23). 3/4 of the water enters the sump (24) through hose (6).

The level control chamber built into the sump operates the pressure switch (15).

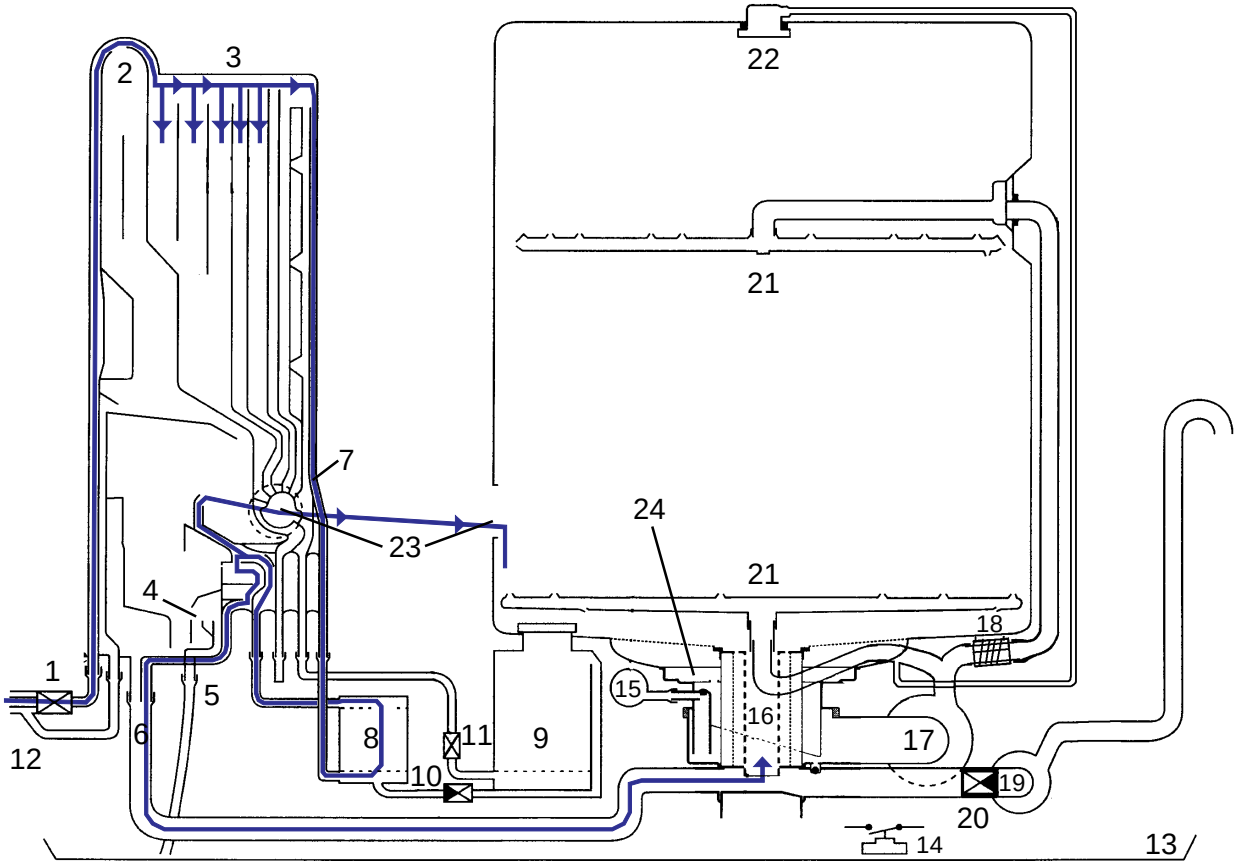

1	Inlet valve	13	Base tray
2	Air break	14	Float switch
3	Regeneration water dosage	15	Pressure switch
4	Overflow safety level	16	Filter
5	Safety overflow	17	Circulation pump
6	Inlet to sump from regeneration dosage chamber	18	Flow heater
		19	Drain pump
7	Regeneration dosage chamber	20	Non-return valve
8	Softener	21	Spray arms
9	Salt container	22	Roof-mounted shower
10	Non-return valve salt container	23	Tub vent
11	Regeneration valve	24	Sump assembly
12	Safety inlet hose		

Filling Steps

1. static fill level
2. timed fill 30 seconds
3. dynamic filling with circulation pump running (speed 2000 min^{-1} to level, maximum time 60 sec.)

Circulation

The circulation pump (17) pumps the water into the roof-mounted shower (22) and both spray arms (21) simultaneously. The filters (16) filter the water and supply it to the circulation pump.

Pulsed wash action

After the filling steps the circulation pump runs at two speeds.

- 4 seconds with 1600 min^{-1}
- 0,8 seconds with 2800 min^{-1}

This new process increases the spray pressure in the dishwasher.

Advantages:

1. Reduced water consumption
2. Reduced energy consumption
3 Noise reduction

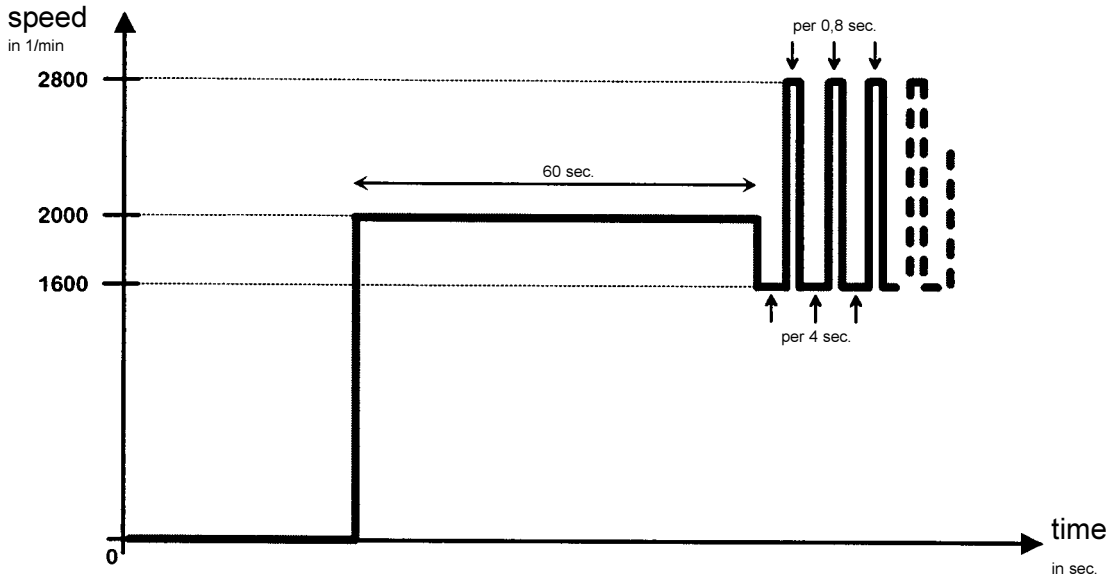

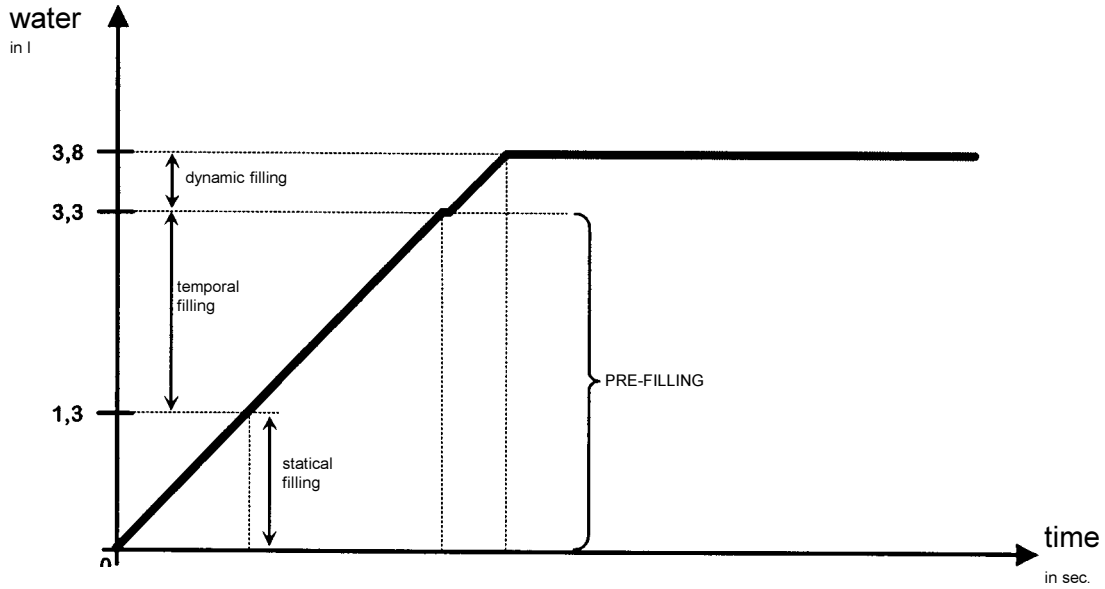

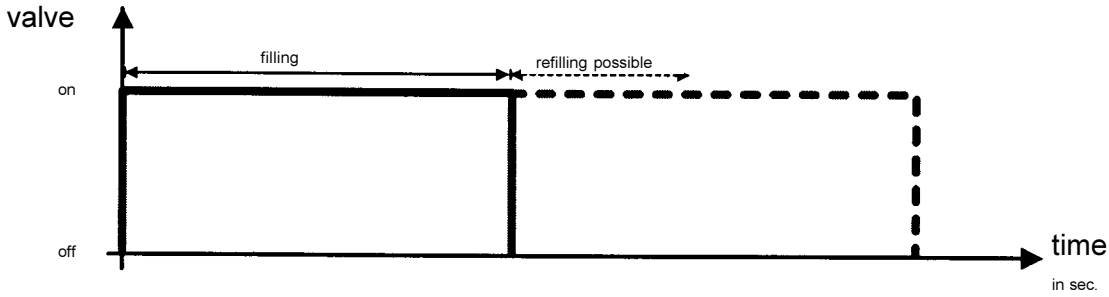

Pumping Out

During the wash cycle the water is pumped out at various stages. First the draining water cleans the filters (16). The filters are open at the bottom which allows any soilage to be rinsed off sufficiently. There is a non-return valve (20) at the inlet connection to the drain pump (19). This valve prevents the water running back from the drain hose into the dishwasher.

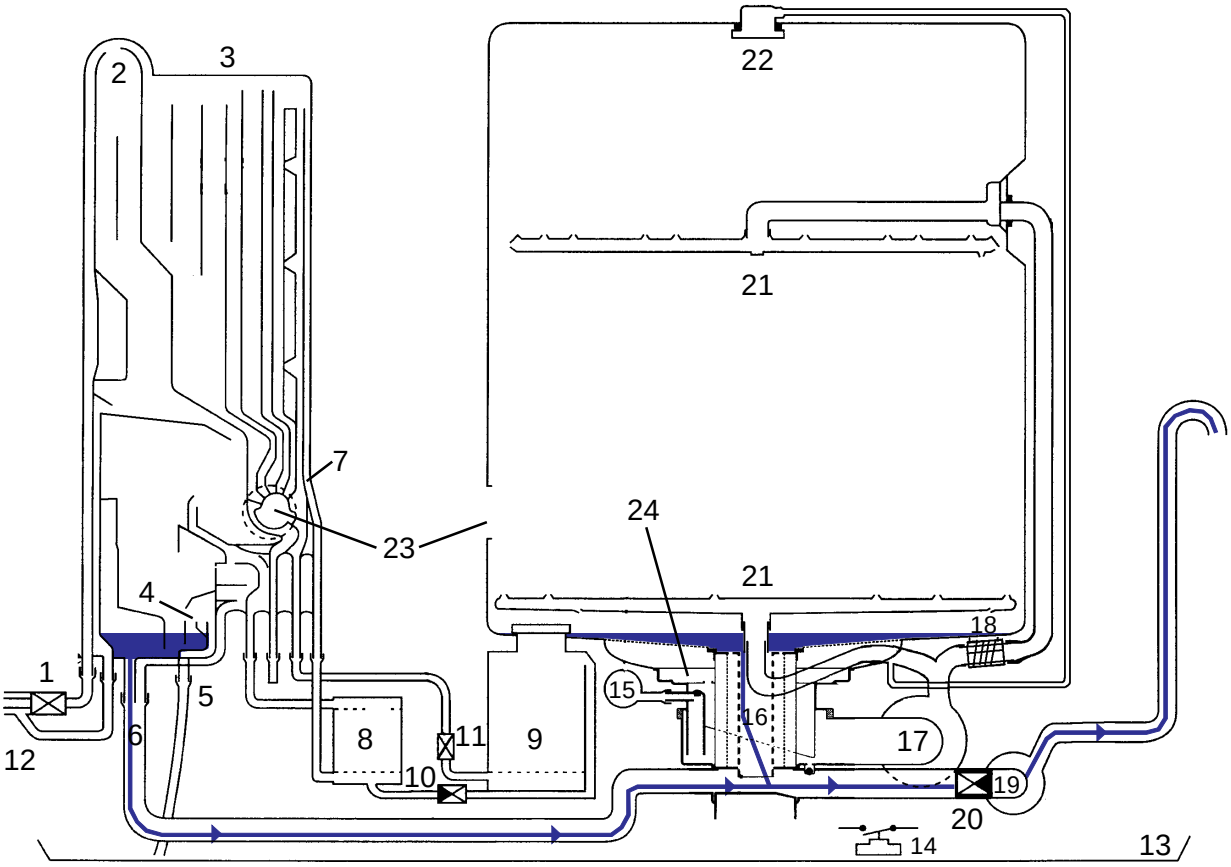

1	Inlet valve	13	Base tray
2	Air break	14	Float switch
3	Regeneration water dosage	15	Pressure switch
4	Overflow safety level	16	Filter
5	Safety overflow	17	Circulation pump
6	Inlet to sump from regeneration dosage chamber	18	Flow heater
		19	Drain pump
7	Regeneration dosage chamber	20	Non-return valve
8	Softener	21	Spray arms
9	Salt container	22	Roof-mounted shower
10	Non-return valve salt container	23	Tub vent
11	Regeneration valve	24	Sump assembly
12	Safety inlet hose		

Installation of the Drain Hose

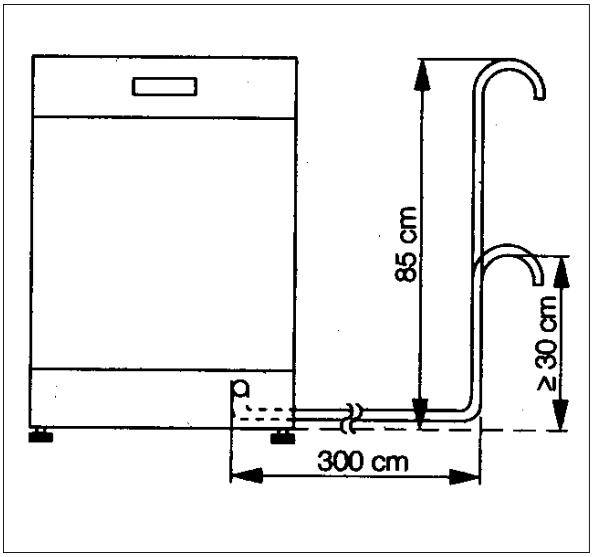

Drain hose connection:
Max. permissible height: 1 metre;
Min. height required 30 cm above floor level.
The drain hose can be extended horizontally to a maximum length of 3 metres, at a height of 85 cm.

Regeneration

The water chamber for regeneration (3) contains 350 ml water. During regeneration, the regeneration valve (11) is energized. The 350 ml water runs into the salt container (9) and mixes with the salt to form a brine solution.

In the top of the salt container there is an opening with a small filter, from here the brine solution passes through a non-return valve (10) and enters the softener (8) where the resins are regenerated.

The softener has 10 settings and can be adjusted to suit the degree of water hardness.

Stufe	Wasserhärte water hardness		Restwasserhärte residual water hardness		Salz Salt	Bedarfsabhängiges Regenerieren nach Demand Dependent Regeneration after
	°d	°F	°d	°F		
0	< 4	< 7				
1	4 - 10	7 - 18	1 - 5	2 - 9	95 g	130 l
2	11 - 14	19 - 25	2 - 5	4 - 9	95 g	97 l
3	15 - 18	26 - 33	3 - 5	5 - 9	95 g	70 l
4	19 - 22	34 - 40	3 - 5	5 - 9	95 g	60 l
5	23 - 26	41 - 47	3 - 6	5 - 11	95 g	47 l
6	27 - 30	48 - 54	4 - 6	7 - 11	95 g	40 l
7	31 - 34	55 - 61	3 - 7	5 - 11	95 g	35 l
8	35 - 40	62 - 72	4 - 7	7 - 13	95 g	30 l
9	41 - 50	73 - 90	-7	-13	95 g	25 l

The adjustment of the water hardness is described in the short list of service functions.

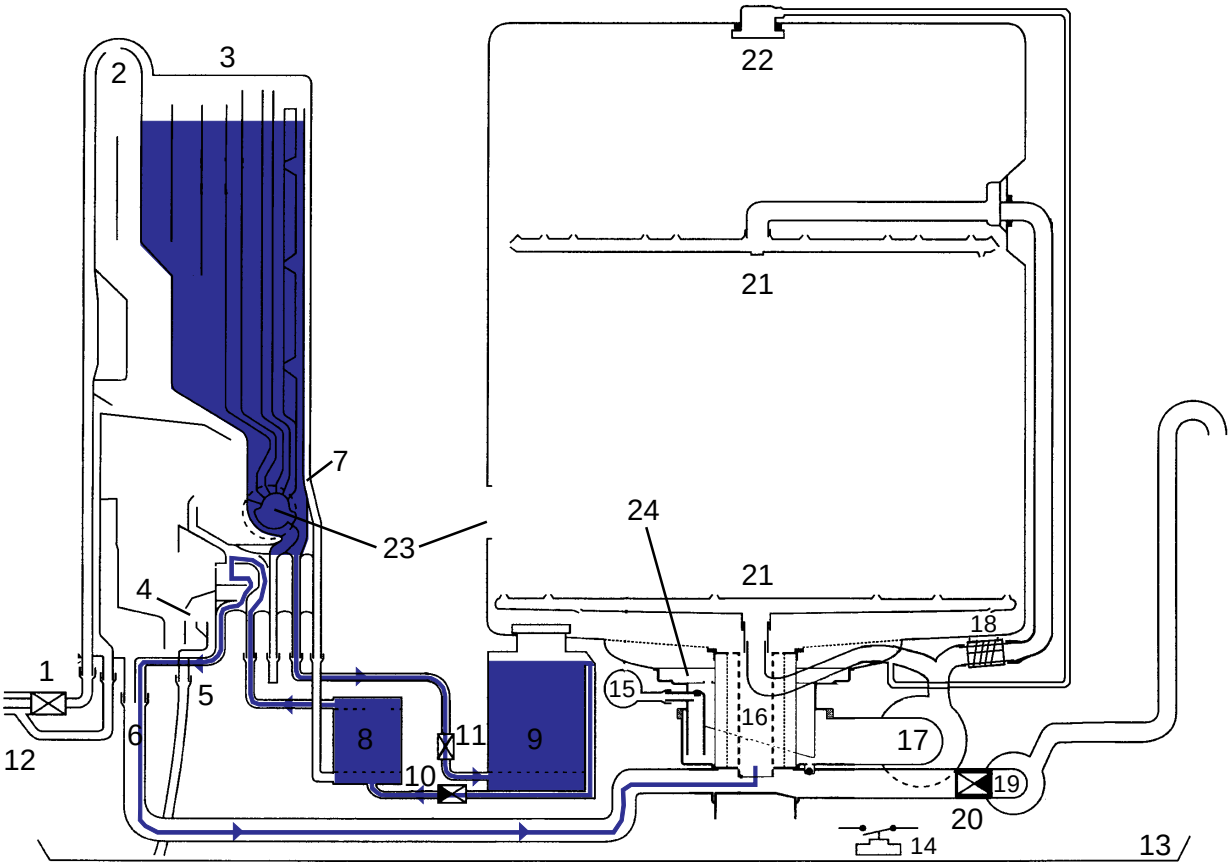

1	Inlet valve	13	Base tray
2	Air break	14	Float switch
3	Regeneration water dosage	15	Pressure switch
4	Overflow safety level	16	Filter
5	Safety overflow	17	Circulation pump
6	Inlet to sump from regeneration dosage chamber	18	Flow heater
		19	Drain pump
7	Regeneration dosage chamber	20	Non-return valve
8	Softener	21	Spray arms
9	Salt container	22	Roof-mounted shower
10	Non-return valve salt container	23	Tub vent
11	Regeneration valve	24	Sump assembly
12	Safety inlet hose		

Flushing Out the Softener

After the regeneration process the softener has to be flushed through at the start of the next wash cycle. This is performed using the following steps:

1. pumping up to the reset point ”level”
2. pumping .....30 sec
3. filling .....15 sec
4. pause .....5 sec
5. filling to switch point ”level”
6. pumping and filling .....5 sec
7. pumping .....5 sec
8. filling to static level or .....15 sec
9. pumping to reset point ”level”
10. pumping .....30 sec

Program Outline

6 program dishwasher e.g. FAVORIT 6280 i or FAVORIT 6270 vi

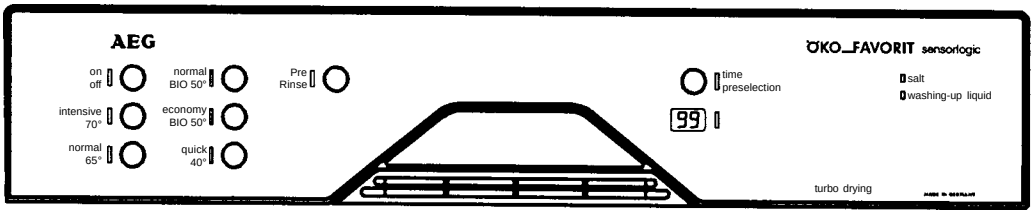

Intensive 70 °C	Normal 65 °C	Normal BIO 65 °C
Economy BIO 50 °C	Quick 40 °C	Pre Rinse

Dishwasher 292 1372 20

Easytronic Dishwashers with Flow Heater - Fully Integrated, Integrated, Built Under, Freestanding

Technical Data

5 Programme. FAVORIT 5080 oder FAVORIT 5270 vi

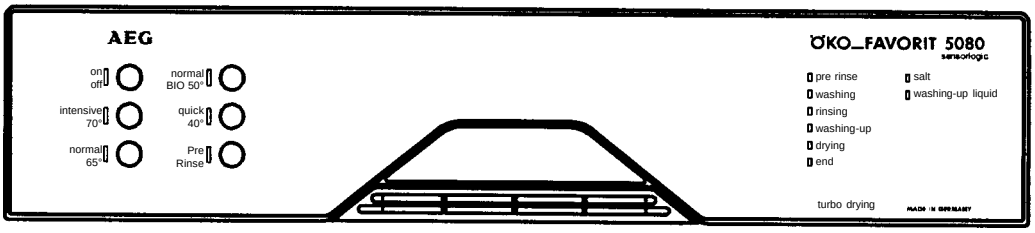

Intensive 70 °C Normal 65 °C Normal BIO 50 °C
Quick 50 °C Pre Rinse

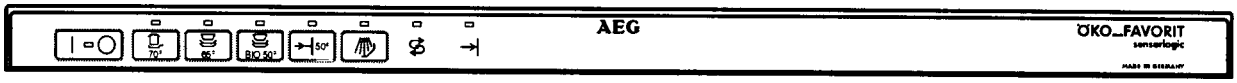

4 Programme. FAVORIT 4270 i

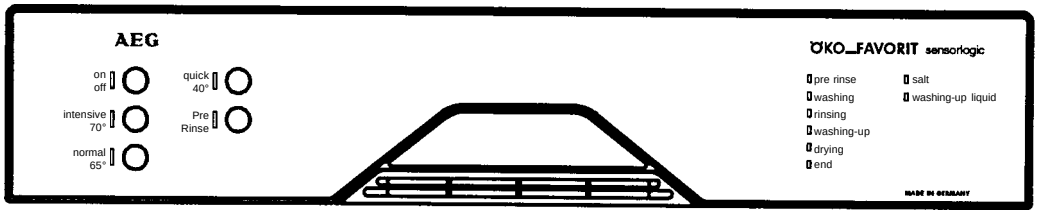

Intensive 65 °C Normal BIO 50 °C Quick 50 °C Pre Rinse

3 Programmge. FAVORIT 3270 vi

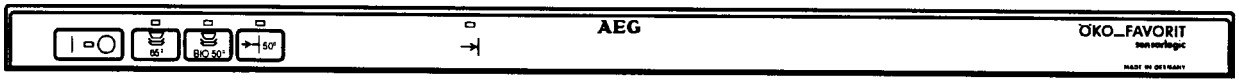

Normal 65 °C BIO 50 °C Quick 50 °C

H:\H1\GSP\TECHNIK\AEGHB\137201GB.P65

Dishwasher 292 1372 21

Easytronic Dishwashers with Flow Heater - Fully Integrated, Integrated, Built Under, Freestanding

Technical Data

Table Wash / Rinsing Cycles

	Pre-rinse Extra	Intensive 65°	Intensive 70°	Normal 65°	Normal BIO 50°	Economy BIO 50°	Quick 50°	Quic 40°
Fuzzy (empty/half or full)	no	yes	yes	yes	yes	yes	no	no
Tub rinse	✓	✓	✓	✓	✓	✓	✓	✓
Pre-rinse cold	✓	-	-	√	√	-	-	-
Pre-rinse warm	-	✓	✓	-	-	-	-	-
Washing	-	✓	✓	✓	✓	✓	✓	✓
Intermediate rinse	-	✓	✓	✓	✓	✓	✓	✓
2. Intermediate rinse	-	✓	✓	-	-	-	-	-
Final rinse	-	✓	✓	✓	✓	✓	✓	✓
Drying	-	✓	✓	✓	✓	✓	✓*	✓*

- is not performed
✓ is performed
✓* is performed only partly

Dishwasher

292 1372 22

Easytronic Dishwashers with Flow Heater - Fully Integrated, Integrated, Built Under, Freestanding

Technical Data

Short Outline of Service and Maintenance Functions

Easytronic:

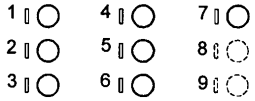

VGA:

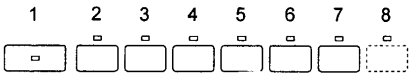

all further data can be found in the accompanying relevant specification

	activation of basic function			afterwards: selection, start or change of function			
	with push botton(s) before pushing botton 1 (on/off)		display	with push botton		display	comments
select hardness	button 4	➔	7-segment display shows value or LED next to button 4 blinks acc. to adjusted value	Activating push button 4 can change the hardness value (scroll function - see point 6). The display is actualized correspondingly.			
service check program	button 2 + 4	➔	LED 2 and 4 blink	button 4	➔	LED 4 blinks program state through 7-segment display or PAA LED	
single actuator selection	button 2 + 5	➔	LED 2 and 5 blink	button 2	➔	LED 2 and 5 blink	Not possible with VGA variant, if button 5 does not exist!
output service error memory	button 2 + 5	➔	LED 2 and 5 blink	button 4	➔	LED 2, 4 and 5 blink 7-segment display or PAA coded (with VGA even partly by buzzer tone)	Not possible with VGA variant, if button 5 does not exist!
erasure service error memory display test	button 2 + 5	➔	LED 2 and 5 blink	button 5	➔	All buttons blink in change with the LED's of the PAA and other right displays	Not possible with VGA variant, if button 5 does not exist!
select heating element performance	function cannot be selected is already considered with programming the variants (see point 6)			function cannot be selected is already considered with programming the variants (see point 6)			

List of Fault Displays

fault indication with 7-segment display (not with VGA)	fault indication with program run display LED's	fault indication acustically and door unlock with fault (only with VGA)	fault description	short description	what happens?
C0	washing	none at the end	communication fault	Between input module and control part. Is realized if after 10 times transfer no data are received resp. sent.	Dishwasher stops and waits until communication functions again.
C1	end (if existing, LED water flashes additionally, depending on variant)	1x squealing immediately	water tap closed	Switch point of the pressure switch is not reached after 60 seconds latest. Program stops.	Program can be continued by pushing the program button.
C2	drying	2x squealing immediately	drain pump	Reset point of the pressure switch is not reached after 120 sec. latest. Program stops.	Program can be continued by pushing the program button.
C3	drying+end	3x squealing immediately	aqua control	Drain pump runs although not selected by electronic.	Program stops. Program starts by itself after end of fault.
C4	-	-	-	-	-
C5	-	-	-	-	-
C6	-	-	-	-	-
C7 *	washing-up+drying+end *	7x squealing at the end *	heating	During heating there is no temperature rise of min. 1,5K within 3 minutes.	Program is carried out until the end without any heating function.
C8 *	rinsing *	8x squealing at the end *	NTC sensor	NTC short circuit or interruption.	Program is carried out until the end without any heating function.
C9 *	intermediate rinsing+end	9x squealing at the end *	tachometer	When selecting the circulation pump, no tachometer signal is realized after 5 sec.	Program is carried out until the end, but without control and with fully speed U-pump.
CA	intermediate rinsing+drying	10x squealing immediately	circulation pump triac short circuit	Tachometer signals are realized although the U-pump is not selected.	Program is finished and water let in up to the switch point of the pressure switch.
Cb *	intermediate rinsing+drying+end	11x squealing at the end	rotary slide	a) Desired position of the rotary slide is not reached within 3 min. b) Position of the rotary slide is realized left alone although there was no selection.	a) Program continues - error code is indicated - with DFH dishwashers heating is not switched off. b) Program continues - heating is switched off after first realized change of position.
CE no display	washing+drying+end	14x squealing immediately	door lock (only with VGA)	Door cannot be locked within 120 sec.	program stops
CF	washing+end	15x squealing immediately	programming fault with formation of variants	Check sum in the EEPROM is not correct. Is only realized after switching on!	program stops

* = display is not visible for the customer (with VGA even not audible) - indication only by the service error memory

Only valid with VGA: Alignment of fault indication by PAA is partly not possible exactly, as LED's do not exist generally for various rinsing processes

Service Check Program Easytronic (with pulse rinsing and active drying)

Time [seconds]	Level	Temperature	Pump	Circulation Pump	Drying	Comments
variable	to reset point		on			
30			on			
variable	to switch point					filling
3	(ca. 0,2 liters)					filling
variable	to reset point		on			
30			on			
variable	to switch point					filling
30	(ca. 2 liters)					filling
60	controls switch point			2000 $^{U}/_{min}$		filling possible
4				1600 $^{U}/_{min}$		
5	controls switch point			pulse		addition of detergent / filling possible
variable	controls switch point	55°		pulse		filling possible / heating
5			on	pulse		
variable	to reset point		on			
25			on			
210					on	regeneration
variable	to reset point		on			
25			on			

Service Check Program Easytronic (with pulse rinsing without active drying) for fully integrated dishwashers

Time [seconds]	Level	Temperature	Pump	Circulation Pump	Drying	Comments
variable	to reset point		on			
30			on			
variable	to switch point					filling
3	(ca. 0,2 liters)					filling
variable	to reset point		on			
30			on			
variable	to switch point					filling
30	(ca. 2 liters)					filling
60	controls switch point			2000 $^{U}/_{min}$		filling possible
4				1600 $^{U}/_{min}$		
5	controls switch point			pulse		addition of detergent / filling possible
variable	controls switch point	55°		pulse		filling possible / heating
5			on	pulse		
variable	to reset point		on			
25			on			
210					on	regeneration
variable	to reset point		on			
25			on			

Test of individual conponents

Engage the service test programme. The individual components will be checked for a duration of 5 seconds in the sequence listed blelow. When the last test (7) has been performed, the test sequence is then repeated, but will automatically be cancelled after a maximum 2 minute duration, or when the appliance is turned off.

1 Inlet Valve
2 regeneration valve
3 circulation pump (operates in pre-series with 1000 U/min)
4 rotarty slide
5 drain pump
6 fan and flap turbo drying
7 dosage combination

Heating is not switched on during the test programme in order to safe guard the flow heater.

Measuring Points on the Electronic (at the base)

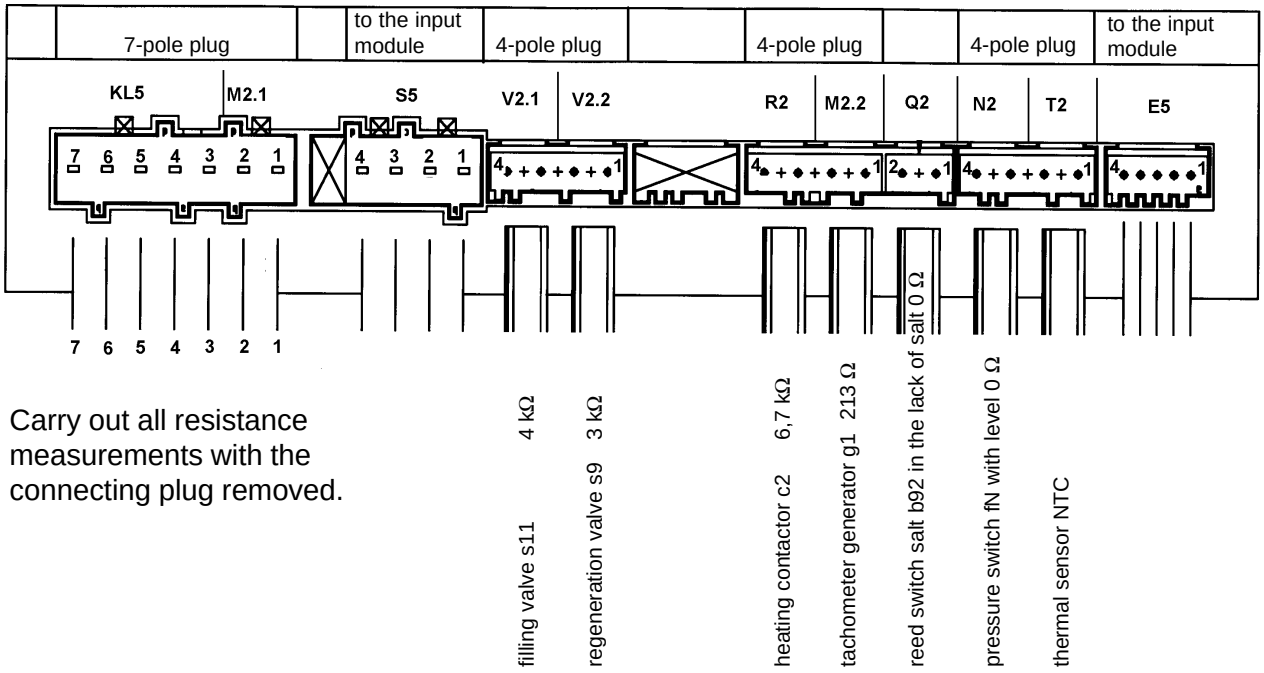

Carry out all resistance measurements with the connecting plug removed.

7-pole plug	pin	resistor
Attention! The mains voltage is with the 7-pole plug in clamps 7 and 5. For resistance measurements you must draw out the mains plug or switch off the fuse.		
circulation pump main winding m8	1 - 2	50,5 Ω
float switch f 16.2	3 - 4	normal 0 Ω
float switch f 16.2	4 - 5	normal ∞ Ω
drain pump m3 normal	4 - 6	170 Ω
drain pump m3 float switch f 16.1 reacted	4 - 7	170 Ω

NTC-Temperaturfühler **Temperature sensor NTC-resistor**	
Temperatur/Widerstand	20 °C / 6032 Ω
temperature/resistor	25 °C / 4829 Ω
(nur bei vollelektron.	30 °C / 3891 Ω
Geschirrspüler)	40 °C / 2573 Ω
(only for fully electronic dishwasher)	50 °C / 1741 Ω
	55 °C / 1444 Ω
	60 °C / 1204 Ω
	65 °C / 1009 Ω
	70 °C / 849 Ω

Measuring Points on the Electronic (at the base)

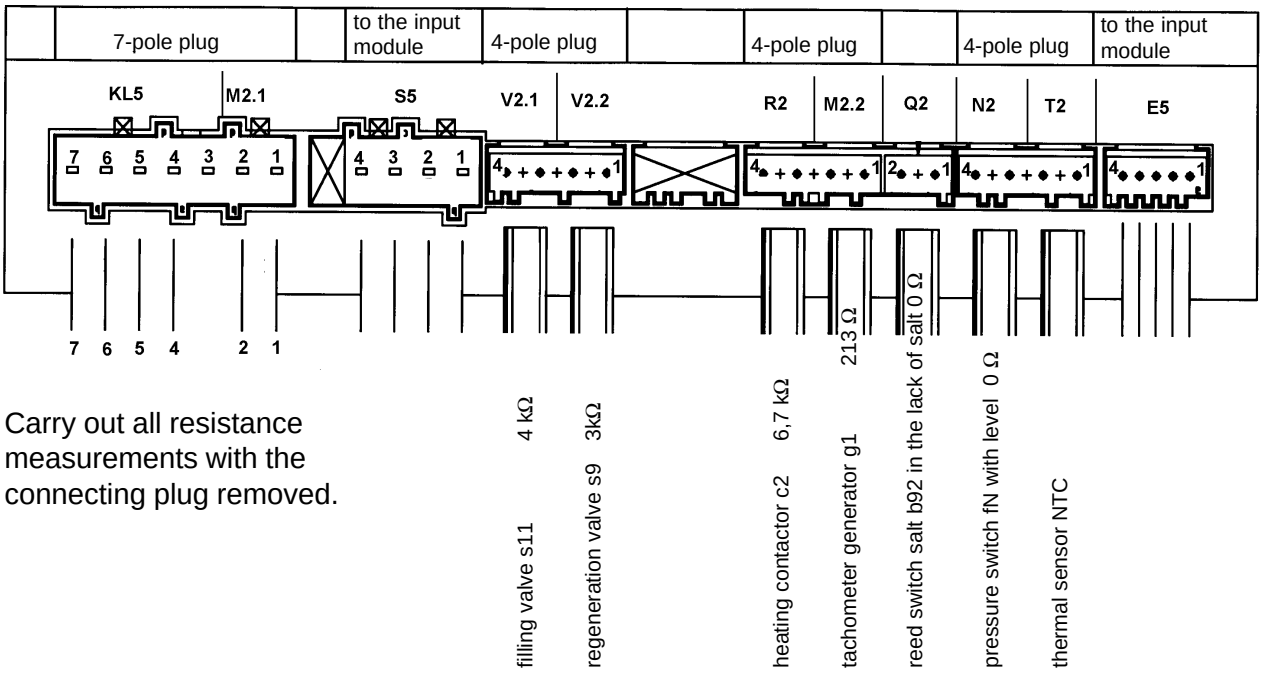

Carry out all resistance measurements with the connecting plug removed.

7-pole plug	Pin	Widerstand
Attention! The mains voltage is with the 7-pole plug in clamps 7 and 5. For resistance measurements you must draw out the mains plug or switch off the fuse.		
circulation pump main winding m8	1 - 2	50,5 Ω
drain pump m3 normal	5 - 6	170 Ω
drain pump m3 float switch f 16.1 reacted or safety pressure switch fS reacted	5 - 7	170 Ω

NTC-Temperaturfühler **Temperature sensor NTC-resistor**	
Temperatur/Widerstand	20 °C / 6032 Ω
temperature/resistor	25 °C / 4829 Ω
(nur bei vollelektron.	30 °C / 3891 Ω
Geschirrspüler)	40 °C / 2573 Ω
(only for fully electronic dishwasher)	50 °C / 1741 Ω
	55 °C / 1444 Ω
	60 °C / 1204 Ω
	65 °C / 1009 Ω
	70 °C / 849 Ω